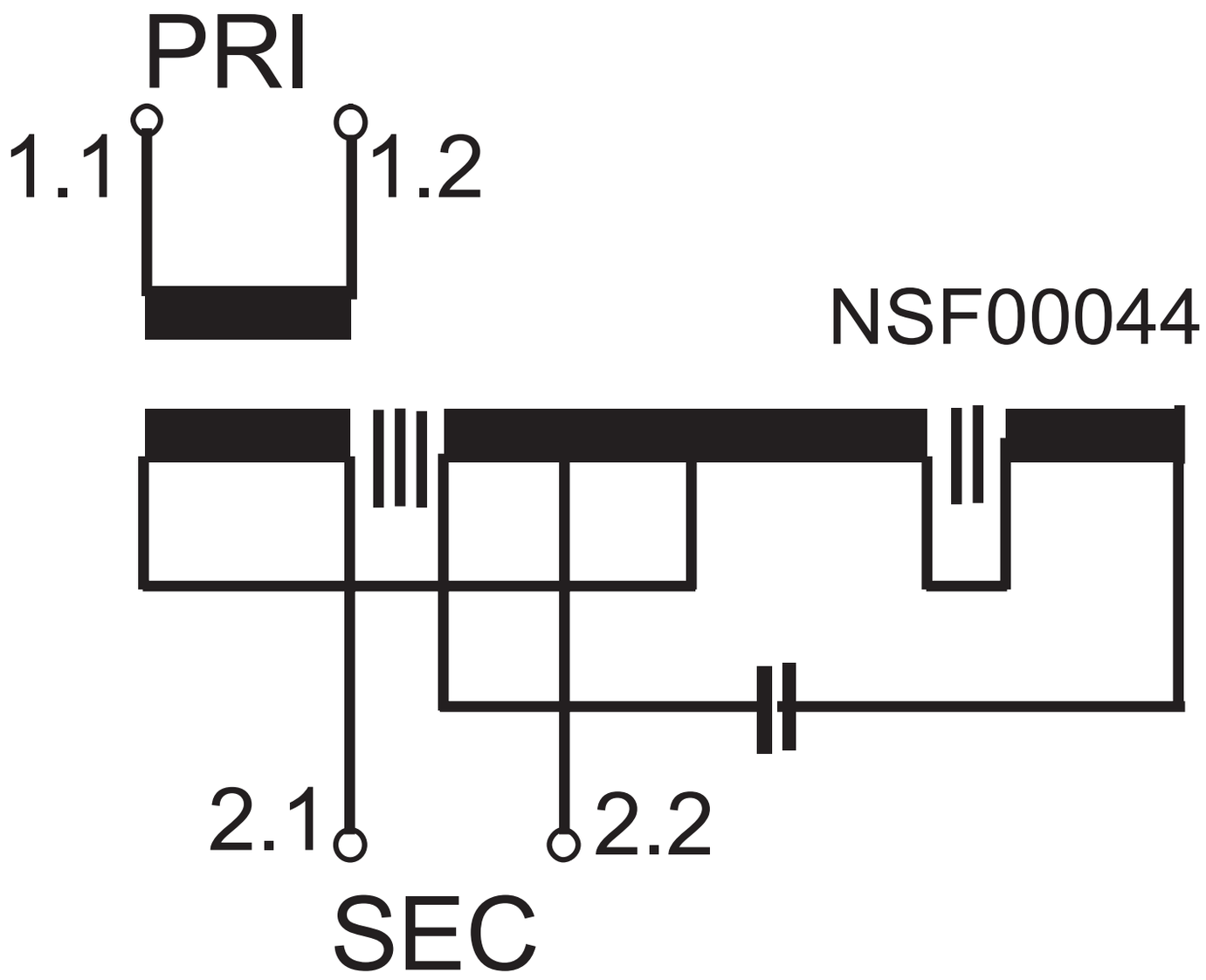Schematics