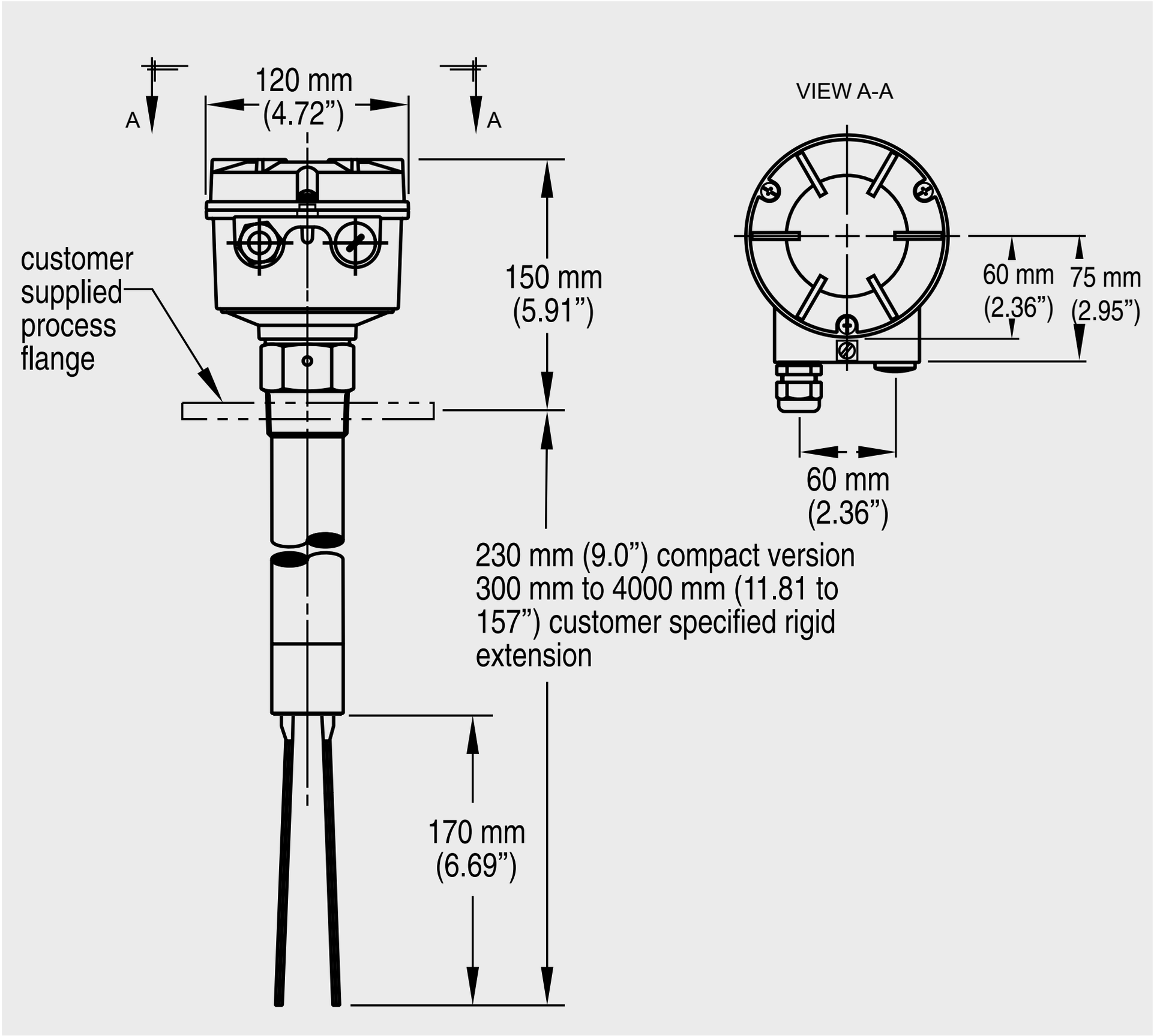

Fig. 4/17 Pointek VLS 200 dimensions